Name _____ Date _____

Regents Physics Lab #24R

Period _____ Mrs. Nadworny

Partners: Due Date: _____

Series and Parallel Circuits

NO Lab Write-Up Required

Research Problem

To construct a series and a parallel circuit and to learn how to measure the voltage and current in them

Materials

- Resistors (50 Ω, 100 Ω, 150 Ω)
- Wires
- Battery Pack
- Digital Multi-meter

Procedure

- **Part One – Series Circuit**

1. Construct a series circuit using the batteries, wire and two resistors (R_1 and R_2). Follow the schematic shown on the next page.
2. Move the ammeter and voltmeter from place to place to take the require readings of current and voltage indicated in the schematic diagram. Remember the rules for using the meters: voltage in parallel, current in series.
3. Record the readings in the empty bubbles in the schematic.
4. Complete the data table underneath the schematic. **Remember to convert to proper units.**
5. Calculate the resistance, both individual and the total, showing all calculations. Use the total current and total voltage to calculate the total resistance.
6. Calculate the power, both individual and the total, of the circuit, showing all calculations. Use the total current and total voltage to calculate the total power.

- **Part Two - Parallel Circuit**

7. Disconnect all wires and begin again.
8. Construct a parallel circuit using the batteries, wire and two resistors (R_1 and R_2). Follow the schematic shown on the following page.
9. Move the ammeter and voltmeter from place to place to take the require readings of current and voltage indicated in the schematic diagram. Remember the rules for using the meters: voltage in parallel, current in series.
10. Record the readings in the empty bubbles in the schematic.
11. Complete the data table underneath the schematic. **Remember to convert to proper units.**
12. Calculate the resistance, both individual and the total, of the circuit, showing all calculations. Use the total current and total voltage to calculate the total resistance.
13. Calculate the power, both individual and the total, of the circuit, showing all calculations. Use the total current and total voltage to calculate the total power.

Series Circuit: (15 pts)

Put the data you collected into the diagram first and **then** copy it into the chart below, converting to proper units. Show your calculations in the space below. If you need more room, use a separate piece of paper.

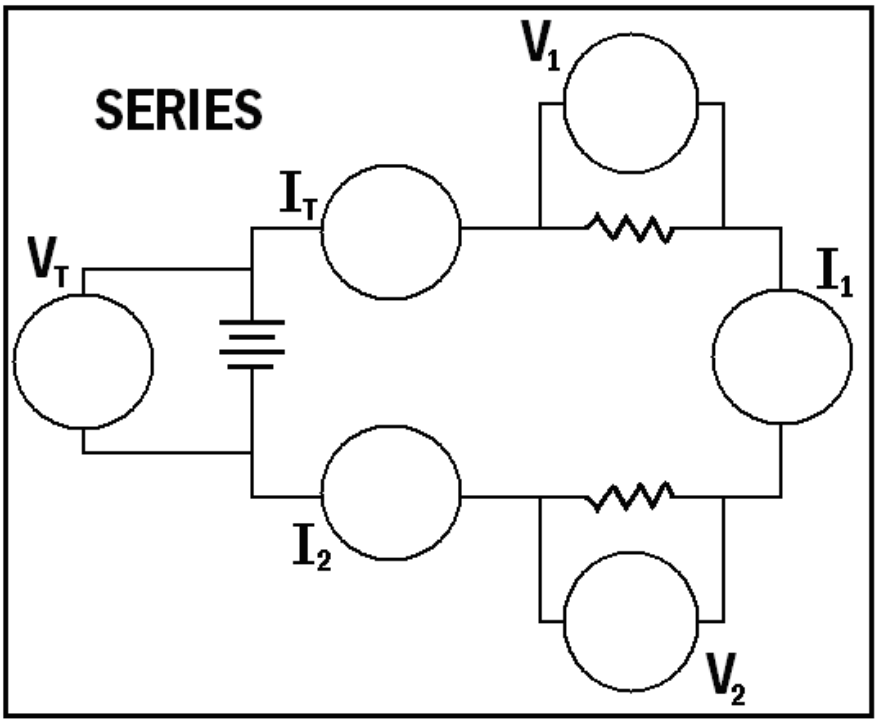

Put the data you collected into the diagram first and **then** copy it into the chart below, converting to proper units.

	Voltage (V)	Current (A)	Resistance (Ω)	Power (W)
Resistor 1				
Resistor 2				
Total				

Calculations: (25 pts)

The data table above will count as your Givens and Unknowns – show Equation, Substitution, and Solution

	Resistor 1	Resistor 2	Total
Resistance:			
Power:			

Parallel Circuit: (15 pts)

Put the data you collected into the diagram first and **then** copy it into the chart below, converting to proper units. Show your calculations in the space below. If you need more room, use a separate piece of paper.

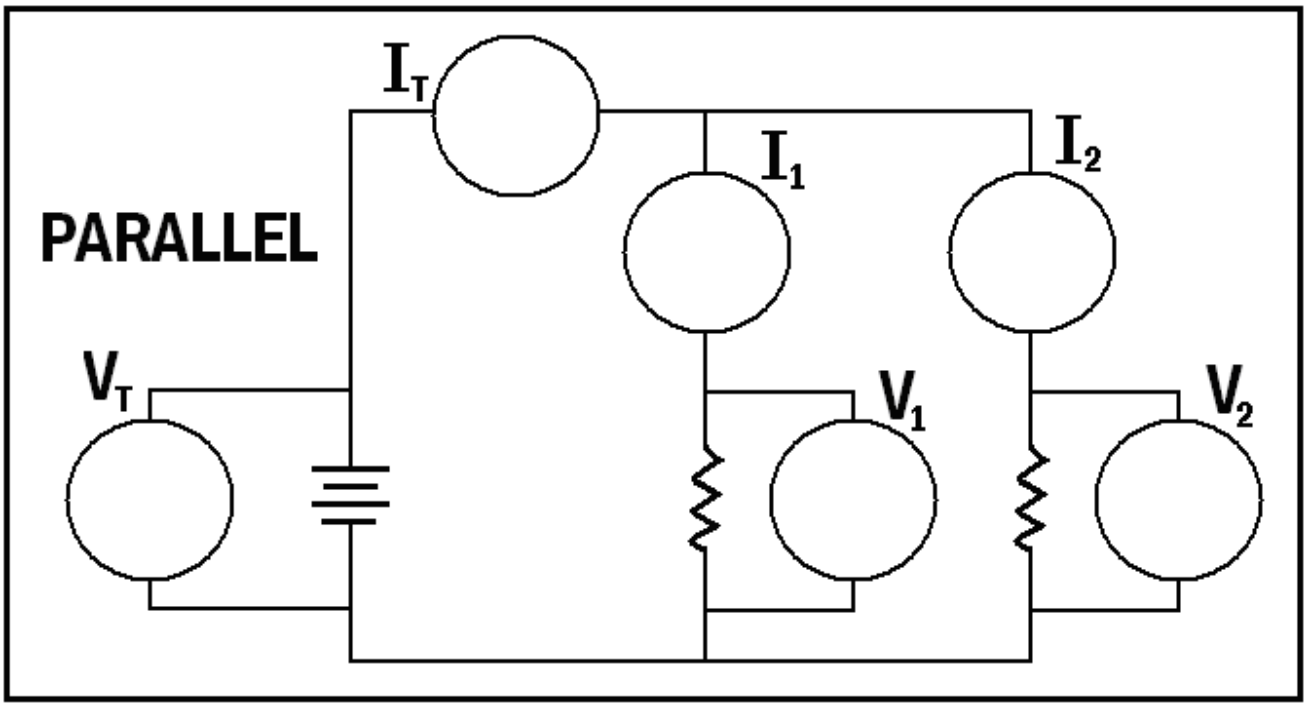

Put the data you collected into the diagram first and **then** copy it into the chart below, converting to proper units.

	Voltage (V)	Current (A)	Resistance (Ω)	Power (W)
Resistor 1				
Resistor 2				
Total				

Calculations: (25 pts)

The data table above will count as your Givens and Unknowns – show Equation, Substitution, and Solution

	Resistor 1	Resistor 2	Total
Resistance:			
Power:			

Post-Lab Questions (20 pts)

1. If you turn off the overhead light in your living room, the TV doesn't go off. Are these two devices connected in series or parallel? Explain.

2. When you blow a fuse or trip a circuit breaker at home, all the lights and devices in one part of the house go off, but not those in another part of the house.
    a. Is this fuse/circuit breaker connected in series or parallel with the fuses/circuit breakers that control the other parts of the house? Explain.

    b. Are the lights and devices in one part of the house connected in series or parallel with the circuit breaker? Explain.

3. The total resistance of a series circuit is (greater than/less than/equal to) the value of any individual resistor.
4. The total resistance of a parallel circuit is (greater than/less than/equal to) the value of any individual resistor.
5. The current that comes out of the battery is (greater than/less than/equal to) the current that goes though each resistor in a series circuit.
6. The current that comes out of the battery is (greater than/less than/equal to) the current that goes though each resistor in a parallel circuit.
7. The voltage across the battery is (greater than/less than/equal to) to the voltage drop across each resistor in a series circuit.
8. The voltage across the battery is (greater than/less than/equal to) to the voltage drop across each resistor in a parallel circuit.
9. Identify one possible source of error that affected your data collection. State what the error was. Explain how it occurred. Explain how it affected your data (increase or decrease I or V). Explain how it affected your results (increase or decrease R or P).